Technical data sheet

Empty housing X 04

Item number: 2005528

Junction box for the connection of cables and lines indoors and in outdoor areas. Square design without entries. Suitable for wall and ceiling mounting with the option to fasten outside, inside or to mount via the corner domes. Particularly impact resistant with IK09. Transparent cover with quick lock, sealable. Made from halogen-free and UV-resistant materials.

Junction box according to EN 60670. Impact resistance IK09 according to N 50102. Protection rating IP67 according to EN 60529.

PC Polycarbonate

Master data

Item number	2005528
Type	X04C LGR-TR
Description 1	Empty Enclosure
Description 2	with transparent lid
Manufacturer	OBO
Dimension	114x114x78
Colour	grey / transparent
Material	Polycarbonate
Smallest sales unit	1
Unit of quantity	Piece
Weight	26.3 kg
Weight unit	kg/100 pc.
CO2 Footprint (GWP) Cradle-to-Gate	1,0067 kg CO2e / 1 Piece

Technical data sheet

Empty housing X 04

Item number: 2005528

Dimensions

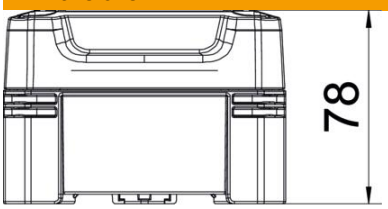

Length	114 mm
Width	114 mm
Height	78 mm

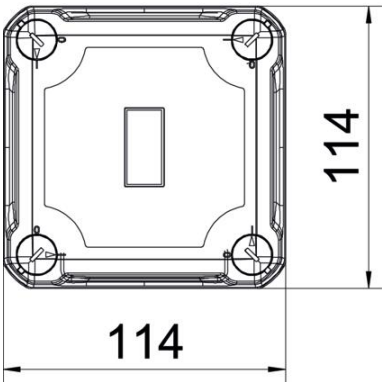

Technical data

Extension option	no
Cover fastening	Screwed
Shape	Square
Suitable for outdoor use	yes
Clear internal dimensions	102x102x60 mm
with lid	yes
Mounting type	Surface-mounted
ROHS-conformant	yes
Protection rating	IP67
Protection rating IK code	IK09
Protection class	II
Permitted temperature range, max.	65 °C
Permitted temperature range, min.	-25 °C
Transparent lid	yes
Weatherproof	yes