Technical data sheet

Junction box X 02

Item number: 2005114

Junction box for the connection of cables and lines indoors and in outdoor areas. Square design with knock-out entries. Suitable for wall and ceiling mounting with the option to fasten outside, inside or to mount via the corner domes. Particularly impact resistant with IK09. Cover with quick lock, sealable. Made from halogen-free and UV-resistant materials.

Junction box according to DIN EN 60670. Flame-resistant to DIN EN 60695/2/11, test temperature 650 °C. Impact resistance IK09 according to DIN EN 50102. Protection rating IP67 according to DIN EN 60529.

PC Polycarbonate

Master data

Item number	2005114
Type	X02 SW
Description 1	Junction box
Manufacturer	OBO
Dimension	95x95x72
Colour	Graphite black; RAL 9011
Material	Polycarbonate
Smallest sales unit	1
Unit of quantity	Piece
Weight	17.8 kg
Weight unit	kg/100 pc.
CO2 Footprint (GWP) Cradle-to-Gate	0,7403 kg CO2e / 1 Piece

Technical data sheet

Junction box X 02

Item number: 2005114

Dimensions

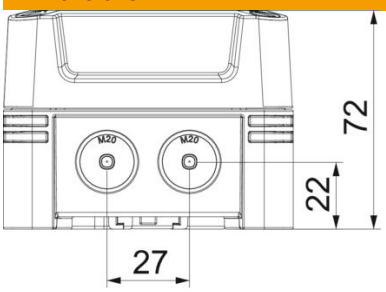

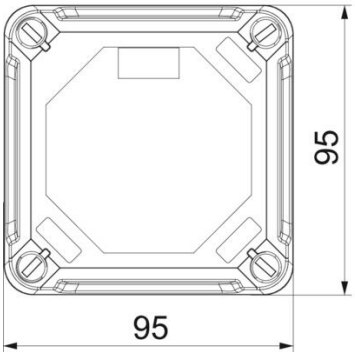

Length	95 mm
Width	95 mm
Height	72 mm

Technical data

Expandable	yes
No. of entries	7
Type of entry	Cuttable stepped membrane
Type of housing penetration	Pre-marking
Measured insulation voltage Vi	750 V
Equipment	Without
Cover	Not transparent
Cover fastening	Screwed
Entry from rear	no
Entries	7 x Ø20
Explosion-tested version	no
Flame-resistant	acc. to VDE 0471/DIN 695 Part 2-1, test temperature 650°C
Shape	Square
Fibre-glass reinforced	yes
Halogen-free	yes
Clear internal dimensions	85x85x57 mm
Max. Conductor cross-section	2.5 mm²
With screening	no
with lid	yes
Mounting type	Wall/ceiling mounting
Nominal cross-section, max.	2.5 mm²
Nominal cross-section, min.	1 mm²
Nominal voltage	750 V
Sealable	yes
ROHS-conformant	yes

Technical data sheet

Junction box X 02

Item number: 2005114

Technical data

Impact-resistant	yes
Protection rating	IP67
Protection rating IK code	IK09
Permitted temperature range, max.	65 °C
Permitted temperature range, min.	-25 °C
Transparent lid	no
Weatherproof	yes