Technical data sheet

Junction box A 14

Item number: 2000378

Protection rating IP55, rated voltage 690 V, nominal cross-section 2.5 mm², 8 entries for cable diameter 5–14 mm

8 entries for cable diameter 5–11 mm.

Clamshell.

Dimensions: 100 x 100 x 40 mm

Clear internal dimensions: 90 x 90 x 35 mm

1 cut-out tool for every 10 boxes

650° HALOGEN FREE IK 07 IP 55 2,5 mm² 16 690 V

PE Polyethylene

Master data

Item number	2000378
Type	A 14
Description 1	Junction box
Manufacturer	OBO
Dimension	100x100x38
Colour	Light grey; RAL 7035
Material	Polyethylene
Smallest sales unit	10
Unit of quantity	Piece
Weight	5.855 kg
Weight unit	kg/100 pc.
CO2 Footprint (GWP) Cradle-to-Gate	0,1598 kg CO2e / 1 Piece

Technical data sheet

Junction box A 14

Item number: 2000378

Dimensions

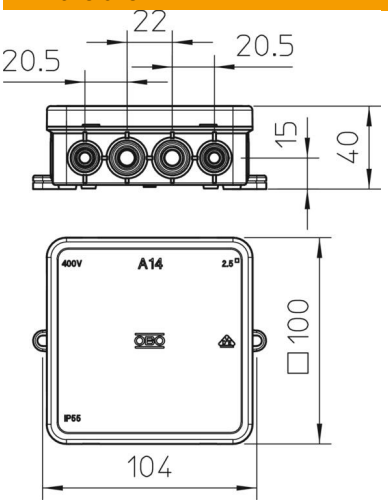

Length	100 mm
Width	100 mm
Height	40 mm

Technical data

Expandable	yes
No. of entries	16
Type of entry	Cable
Type of entry	Cable
Type of housing penetration	Pre-marking
Measured insulation voltage Vi	690 V
Equipment	Without
Cover	Not transparent
Cover fastening	Locking
Entry from rear	no
Entries	8 entries for cable diameter 5–14 mm 8 entries for cable diameter 5–11 mm
Explosion-tested version	no
Flame-resistant	acc. to VDE 0471/DIN 695 Part 2-1, test temperature 650°C
Shape	Square
Maintain electrical functions	Without
For Ex zone	Without
For Ex zone gas	Without
For Ex zone dust	Without
Halogen-free	yes
Clear internal dimensions	90x90x35 mm
Max. Conductor cross-section	2.5 mm²
With screening	no
with lid	yes
Mounting in the earth	no
Mounting underwater	no
Mounting type	Wall/ceiling mounting
Nominal cross-section, min.	2.5 mm²
Nominal voltage	690 V
Sealable	no
ROHS-conformant	yes

Technical data

Protection rating	IP55
Permitted temperature range, max.	45 °C
Permitted temperature range, min.	-5 °C
Transparent lid	no
Castable	no
Sealing compound supplied	no
Weatherproof	no
Junction box cover version	Blanking lid