Technical data sheet

Spacer clip 733 A4

Item number: 1362926

Spacer clip for the installation of pipes and cables on walls, ceilings and floors. With self-locking cover. Fastening via slot.

Approved for the maintenance of electrical function according to DIN 4102 Part 12, maintenance of electrical function classes E 30 to E 90.

E30 E60 E90

A4 Stainless steel

Master data

Item number	1362926
Type	ASL 733 36 A4
Description 1	Distance saddle
Description 2	with slot
Manufacturer	OBO
Dimension	30-36mm
Material	Stainless steel 1.4571
Smallest sales unit	20
Unit of quantity	Piece
Weight	3.846 kg
Weight unit	kg/100 pc.
CO2 Footprint (GWP) Cradle-to-Gate	0,2565 kg CO2e / 1 Piece

Technical data sheet

Spacer clip 733 A4

Item number: 1362926

Dimensions

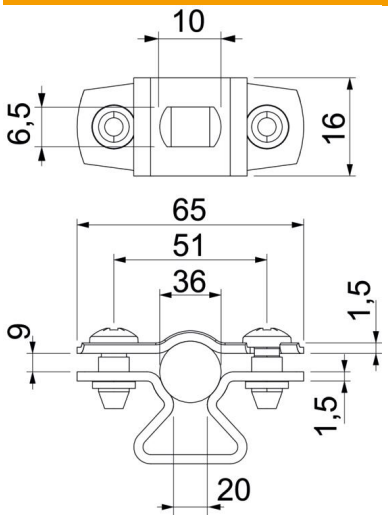

Dimension A	65 mm
Dimension B	51 mm
Dimension b	16 mm
Dimension D	36 mm
Dimension d max.	36 mm
Dimension d min.	30 mm
Dimension L	10 mm
Dimension s	20 mm
Dimension t1 (mm)	1.5 mm
Dimension t2 (mm)	1.5 mm
Dimension x	9 mm

Technical data

Distance to the wall	yes
Number of cables/pipes	1
Version for	Closed
Fastening type	Screw hole
Maintain electrical functions	yes
For diameter	30 - 36
Halogen-free	yes
Plastic-covered	no
Material thickness	1.5 mm
ROHS-conformant	yes
Clamping range D, max.	36 mm
Clamping range D, min.	30 mm
UV-resistant	yes