# Technical data sheet

## Spacer clip 733 G

## Item number: 1362754

Spacer clip for the installation of pipes and cables on walls, ceilings and floors. With self-locking cover. Fastening via slot.

Approved for the maintenance of electrical function according to DIN 4102 Part 12, maintenance of electrical function classes E 30 to E 90.

E30 E60 E90

St Steel

G Electrogalvanised

### Master data

| | |
|---|---|
| Item number | 1362754 |
| Type | ASL 733 10 G |
| Description 1 | Distance saddle |
| Description 2 | with slot |
| Manufacturer | OBO |
| Dimension | 8-10mm |
| Material | Steel |
| Surface | Electrogalvanised |
| Surface standard | EN ISO 19598 / EN ISO 4042 |
| Smallest sales unit | 25 |
| Unit of quantity | Piece |
| Weight | 1.794 kg |
| Weight unit | kg/100 pc. |
| CO2 Footprint (GWP) Cradle-to-Gate | 0,0539 kg CO2e / 1 Piece |

# Technical data sheet

## Spacer clip 733 G

## Item number: 1362754

### Dimensions

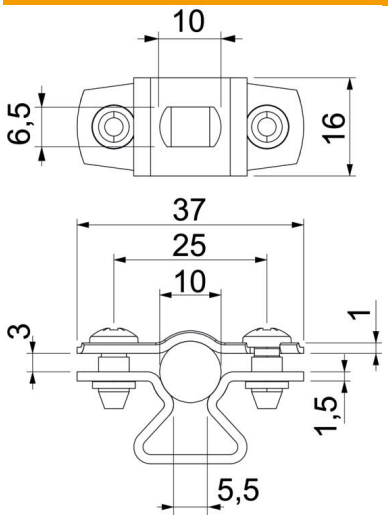


| | |
|---|---|
| Dimension A | 37 mm |
| Dimension B | 25 mm |
| Dimension b | 16 mm |
| Dimension D | 10 mm |
| Dimension d max. | 10 mm |
| Dimension d min. | 8 mm |
| Dimension L | 10 mm |
| Dimension s | 5.5 mm |
| Dimension t1 (mm) | 1 mm |
| Dimension t2 (mm) | 1.5 mm |
| Dimension x | 3 mm |

### Technical data

| | |
|---|---|
| Distance to the wall | yes |
| Number of cables/pipes | 1 |
| Version for | Closed |
| Fastening type | Screw hole |
| Maintain electrical functions | yes |
| For diameter | 8 - 10 |
| Halogen-free | yes |
| Plastic-covered | no |
| Material thickness | 1.5 mm |
| ROHS-conformant | yes |
| Clamping range D, max. | 10 mm |
| Clamping range D, min. | 8 mm |
| UV-resistant | yes |