Technical data sheet

Spacer clip 733 FT

Item number: 1362738

Spacer clip for the installation of pipes and cables on walls, ceilings and floors. With self-locking cover. Fastening via slot.

Approved for the maintenance of electrical function according to DIN 4102 Part 12, maintenance of electrical function classes E 30 to E 90.

E30 E60 E90

St Steel

FT Hot-dip galvanised

Master data

Item number	1362738
Type	ASL 733 63 FT
Description 1	Distance saddle
Description 2	with slot
Manufacturer	OBO
Dimension	53-63mm
Material	Steel
Surface	Hot-dip galvanised
Surface standard	DIN EN ISO 1461
Smallest sales unit	20
Unit of quantity	Piece
Weight	6.477 kg
Weight unit	kg/100 pc.
CO2 Footprint (GWP) Cradle-to-Gate	0,1995 kg CO2e / 1 Piece

Technical data sheet

Spacer clip 733 FT

Item number: 1362738

Dimensions

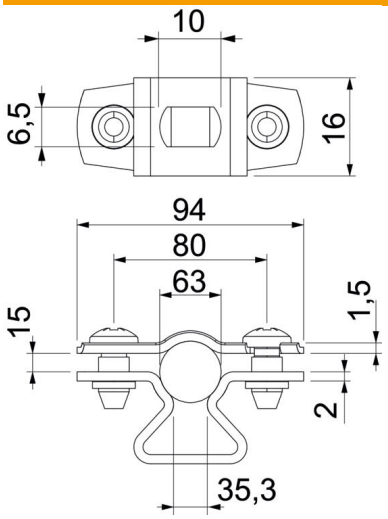

Dimension A	94 mm
Dimension B	80 mm
Dimension b	16 mm
Dimension D	63 mm
Dimension d max.	63 mm
Dimension d min.	53 mm
Dimension L	10 mm
Dimension s	35.3 mm
Dimension t1 (mm)	1.5 mm
Dimension t2 (mm)	2 mm
Dimension x	15 mm

Technical data

Distance to the wall	yes
Number of cables/pipes	1
Version for	Closed
Fastening type	Screw hole
Maintain electrical functions	yes
For diameter	53 - 63
Halogen-free	yes
Plastic-covered	no
Material thickness	1.5 mm
ROHS-conformant	yes
Clamping range D, max.	63 mm
Clamping range D, min.	53 mm
UV-resistant	yes