Technical data sheet

Spacer clip 732 A2

Item number: 1362626

Spacer clip for the installation of pipes and cables on walls, ceiling and floors.
With self-locking upper part.
Approved for the maintenance of electrical function according to DIN 4102 Part 12, maintenance of electrical function classes E30 to E90.

E30 E60 E90

A2 Stainless steel

Master data

Item number	1362626
Type	ASG 732 8 A2
Description 1	Distance saddle
Description 2	with threaded connection M6
Manufacturer	OBO
Dimension	7-8mm
Material	Stainless steel 1.4301
Smallest sales unit	25
Unit of quantity	Piece
Weight	1.561 kg
Weight unit	kg/100 pc.
CO2 Footprint (GWP) Cradle-to-Gate	0,1492 kg CO2e / 1 Piece

Technical data sheet

Spacer clip 732 A2

Item number: 1362626

Dimensions

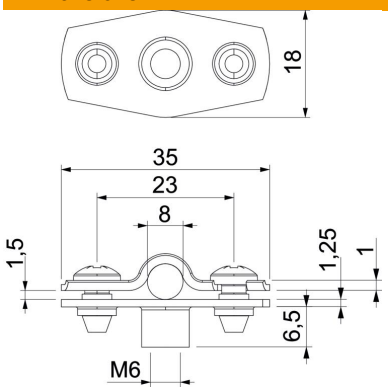

Dimension A	35 mm
Dimension B	23 mm
Dimension b	18 mm
Dimension D	8 mm
Dimension d max.	8 mm
Dimension d min.	7 mm
Dimension H1	12 mm
Dimension t1 (mm)	1 mm
Dimension t2 (mm)	1.25 mm
Dimension x	1.5 mm

Technical data

Distance to the wall	yes
Number of cables/pipes	1
Version for	Closed
Maintain electrical functions	yes
For diameter	7 - 8
Halogen-free	yes
Plastic-covered	no
Material thickness	1.25 mm
ROHS-conformant	yes
Clamping range D, max.	8 mm
Clamping range D, min.	7 mm
UV-resistant	yes