Technical data sheet

Clamp clip 2056, U-foot, single, metal pressure trough, A2

Item number: 1188410

Clamp clip with U-foot, metal pressure trough with rounded edges to protect the cable. For vertical and horizontal mounting of 1 single cable on a C-profile rail. For slot width 18–22 mm. With 1-start screw thread on pressure trough, universal hexagonal screw head WAF10, with slot and cross recess. Suitable for mounting indoors and outdoors. We recommend the use of a counter-trough.

HALOGEN FREE 18 22 U E30 E60 E90

A2 Stainless steel

2B Bright, treated

Master data

Item number	1188410
Type	BS-U1-M-28 A2
Description 1	Clamp clip 2056
Manufacturer	OBO
Dimension	22-28mm
Material	Stainless steel 1.4301
Surface Surface standard	Bright, treated
Smallest sales unit	25
Unit of quantity	Piece
Weight	5.872 kg
Weight unit	kg/100 pc.
CO2 Footprint (GWP) Cradle-to-Gate	0,3297 kg CO2e / 1 Piece

Technical data sheet

Clamp clip 2056, U-foot, single, metal pressure trough, A2

Item number: 1188410

Dimensions

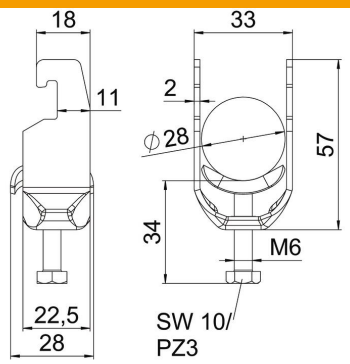

Length	22.5 mm
Width	33 mm
Height	57 mm
Plate thickness	2 mm
Dimension A	22.5 mm
Dimension B	33 mm
Dimension C	28 mm
Dimension G (mm)	M6
Dimension H	57 mm
Dimension L	34 mm
Dimension t	2 mm

Technical data

Number of cables/pipes	1
For pipe diameter, max.	28 mm
For pipe diameter, min.	22 mm
for rail with slot width (with interval), max.	22 mm
for rail with slot width (with interval), min.	18 mm
Thread	M6
Halogen-free	yes
Length of external dimensions	28 mm
Max. Tightening torque	3 Nm
With metal trough	yes
Mounting type	Profile rail
Slot width	10 mm
Clamping range D, max.	28 mm
Clamping range D, min.	22 mm
Surface addition	Untreated
Material addition	Rustproof steel