Technical data sheet

Clamp clip 2056 U-foot, 1-fold, plastic pressure sleeve, A2

Item number: 1186836

Clamp clip with U-foot, plastic pressure sleeve made of polypropylene. For vertical and horizontal mounting of 1 single cable on a C-profile rail. For slot width 18–22 mm. With 1-start screw thread on pressure sleeve, universal hexagonal screw head WAF10, with slot and cross recess. Suitable for assembly indoors and outdoors. We recommend the use of a counter-sleeve.

HALOGEN FREE 18 22 U

A2 Stainless steel

2B Bright, treated

Master data

Item number	1186836
Type	BS-U1-K-40 A2
Description 1	Clamp clip 2056
Manufacturer	OBO
Dimension	34-40mm
Material	Stainless steel 1.4301
Surface	Bright, treated
Surface standard	
Smallest sales unit	25
Unit of quantity	Piece
Weight	6.401 kg
Weight unit	kg/100 pc.
CO2 Footprint (GWP) Cradle-to-Gate	0,4809 kg CO2e / 1 Piece

Technical data sheet

Clamp clip 2056 U-foot, 1-fold, plastic pressure sleeve, A2

Item number: 1186836

Dimensions

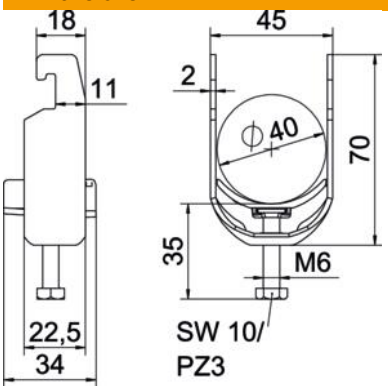

Length	22.5 mm
Width	45 mm
Height	70 mm
Plate thickness	2 mm
Dimension A	22.5 mm
Dimension B	45 mm
Dimension C	34 mm
Dimension G (mm)	M6
Dimension H	70 mm
Dimension L	35 mm
Dimension t	2 mm

Technical data

Number of cables/pipes	1
For pipe diameter, max.	40 mm
For pipe diameter, min.	34 mm
for rail with slot width (with interval), max.	22 mm
for rail with slot width (with interval), min.	18 mm
Thread	M6
Halogen-free	yes
Length of external dimensions	34 mm
Max. Tightening torque	3 Nm
With plastic trough	yes
With metal trough	no
Mounting type	Profile rail
ROHS-conformant	yes
Slot width	10 mm
Clamping range D, max.	40 mm
Clamping range D, min.	34 mm
Surface addition	Untreated
Material addition	Rustproof steel
With counter-trough	no
Material of trough	Plastic
Material quality of trough	Polypropylene