Technical data sheet

Clamp clip 2056 U-foot, 3-fold, plastic pressure sleeve, FT

Item number: 1186744

Clamp clip with U-foot, plastic pressure sleeve made of polypropylene. For vertical and horizontal mounting of 3 single cables on a C-profile rail. For slot width 18 mm or 22 mm. With 1-start screw thread on pressure sleeve, universal hexagonal screw head WAF10, with slot and cross recess. Suitable for assembly indoors and outdoors. Multiple cables should be separated by double sleeves. We recommend the use of a counter-sleeve. In AC circuits the product shall not be used with single core cable in galvanised cable ladders and profile rails because of the inductive heating.

HALOGEN FREE · CE · 18 · 22 · U

St Steel

FT Hot-dip galvanised

Master data

Item number	1186744
Type	BS-U3-K-46 FT
Description 1	Clamp clip 2056
Description 2	triple
Manufacturer	OBO
Dimension	40-46mm
Material	Steel
Surface	Hot-dip galvanised
Surface standard	DIN EN ISO 1461
Smallest sales unit	50
Unit of quantity	Piece
Weight	18.95 kg
Weight unit	kg/100 pc.
CO2 Footprint (GWP) Cradle-to-Gate	0,432 kg CO2e / 1 Piece

Technical data sheet

Clamp clip 2056 U-foot, 3-fold, plastic pressure sleeve, FT

Item number: 1186744

Dimensions

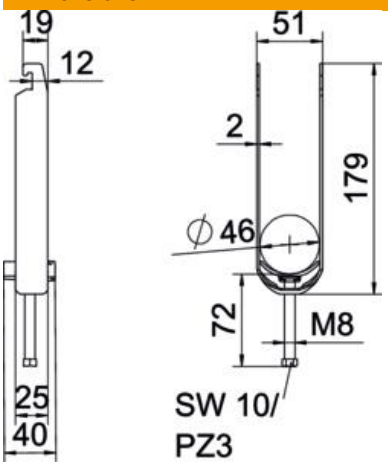

Length	25 mm
Width	51 mm
Height	179 mm
Plate thickness	2 mm
Dimension A	25 mm
Dimension B	51 mm
Dimension C	40 mm
Dimension G (mm)	M8
Dimension H	179 mm
Dimension L	72 mm
Dimension t	2 mm

Technical data

Number of cables/pipes	3
For pipe diameter, max.	46 mm
For pipe diameter, min.	40 mm
for rail with slot width (with interval), max.	22 mm
for rail with slot width (with interval), min.	18 mm
Thread	M8
Halogen-free	yes
Length of external dimensions	40 mm
Max. Tightening torque	5 Nm
With plastic trough	yes
Mounting type	Profile rail
ROHS-conformant	yes
Slot width	10 mm
Clamping range D, max.	46 mm
Clamping range D, min.	40 mm
Surface addition	hot galvanised
Material addition	Steel
With counter-trough	no
Material of trough	Plastic
Material quality of trough	Polypropylene