Technical data sheet

Clamp clip 2056 U-foot, 1-fold, metal pressure sleeve, A4

Item number: 1186616

Clamp clip with U-foot, metal pressure sleeve with rounded edges to protect the cable. For vertical and horizontal mounting of 1 single cable on a C-profile rail. For slot width 18–22 mm. With 1-start screw thread on pressure sleeve, universal hexagonal screw head WAF10, with slot and cross recess. Suitable for assembly indoors and outdoors. We recommend the use of a counter-sleeve.

18 22 U E30 E60 E90

A4 Stainless steel

2B Bright, treated

Master data

Item number	1186616
Type	BS-U1-M-22 A4
Description 1	Clamp clip 2056
Manufacturer	OBO
Dimension	16-22mm
Material	Stainless steel 1.4571
Surface	Bright, treated
Surface standard	
Smallest sales unit	25
Unit of quantity	Piece
Weight	3.59 kg
Weight unit	kg/100 pc.
CO2 Footprint (GWP) Cradle-to-Gate	0,2899 kg CO2e / 1 Piece

Technical data sheet

Clamp clip 2056 U-foot, 1-fold, metal pressure sleeve, A4

Item number: 1186616

Dimensions

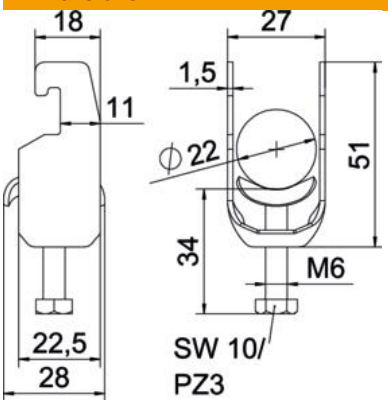

Length	22.5 mm
Width	27 mm
Height	51 mm
Plate thickness	1.5 mm
Dimension A	22.5 mm
Dimension B	27 mm
Dimension C	28 mm
Dimension G (mm)	M6
Dimension H	51 mm
Dimension L	34 mm
Dimension t	1.5 mm

Technical data

Number of cables/pipes	1
For pipe diameter, max.	22 mm
For pipe diameter, min.	16 mm
for rail with slot width (with interval), max.	22 mm
for rail with slot width (with interval), min.	18 mm
Thread	M6
Halogen-free	yes
Length of external dimensions	28 mm
Max. Tightening torque	3 Nm
With metal trough	yes
Mounting type	Profile rail
ROHS-conformant	yes
Slot width	10 mm
Clamping range D, max.	22 mm
Clamping range D, min.	16 mm
Surface addition	Untreated
Material addition	Rustproof steel
With counter-trough	no
Material of trough	Rustproof steel