# Technical data sheet

## Clamp clip 2056 U-foot, 1-fold, metal pressure sleeve, FT

## Item number: 1186597

Clamp clip with U-foot, metal pressure sleeve with rounded edges to protect the cable. For vertical and horizontal mounting of 1 single cable on a C-profile rail. For slot width 18–22 mm. With 1-start screw thread on pressure sleeve, universal hexagonal screw head WAF10, with slot and cross recess. Suitable for assembly indoors and outdoors. We recommend the use of a counter-sleeve. In AC circuits the product shall not be used with single core cable in galvanised cable ladders and profile rails because of the inductive heating.

18 22 U E30 E60 E90 60 kA

St Steel

FT Hot-dip galvanised

### Master data

| | |
|---|---|
| Item number | 1186597 |
| Type | BS-U1-M-100 FT |
| Description 1 | Clamp clip 2056 |
| Manufacturer | OBO |
| Dimension | 90-100mm |
| Material | Steel |
| Surface | Hot-dip galvanised |
| Surface standard | DIN EN ISO 1461 |
| Smallest sales unit | 25 |
| Unit of quantity | Piece |
| Weight | 25.773 kg |
| Weight unit | kg/100 pc. |
| CO2 Footprint (GWP) Cradle-to-Gate | 0,753 kg CO2e / 1 Piece |

# Technical data sheet

## Clamp clip 2056 U-foot, 1-fold, metal pressure sleeve, FT

## Item number: 1186597

### Dimensions

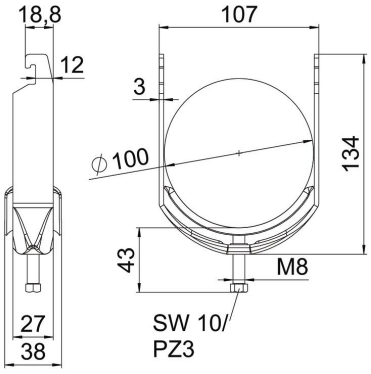


| | |
|---|---|
| Length | 27 mm |
| Width | 107 mm |
| Height | 134 mm |
| Plate thickness | 3 mm |
| Dimension A | 27 mm |
| Dimension B | 107 mm |
| Dimension C | 38 mm |
| Dimension G (mm) | M8 |
| Dimension H | 134 mm |
| Dimension L | 43 mm |
| Dimension t | 3 mm |

### Technical data

| | |
|---|---|
| Number of cables/pipes | 1 |
| Maintain electrical functions | yes |
| For pipe diameter, max. | 100 mm |
| For pipe diameter, min. | 90 mm |
| for rail with slot width (with interval), max. | 22 mm |
| for rail with slot width (with interval), min. | 18 mm |
| Thread | M8 |
| Halogen-free | yes |
| Length of external dimensions | 38 mm |
| Max. Tightening torque | 5 Nm |
| With plastic trough | no |
| With metal trough | yes |
| Mounting type | Profile rail |
| ROHS-conformant | yes |
| Slot width | 10 mm |
| Clamping range D, max. | 100 mm |
| Clamping range D, min. | 90 mm |
| Surface addition | hot galvanised |
| Material addition | Steel |
| With counter-trough | no |
| Material of trough | Steel |