Technical data sheet

Clamp clip 2056 U-foot, 2-fold, metal pressure sleeve, FT

Item number: 1186530

Clamp clip with U-foot, metal pressure sleeve with rounded edges to protect the cable. For vertical and horizontal mounting of 2 single cables on a C-profile rail. For slot width 18–22 mm. With 1-start screw thread on pressure sleeve, universal hexagonal screw head WAF10, with slot and cross recess. Suitable for assembly indoors and outdoors. Multiple cables should be separated by double sleeves. We recommend the use of a counter-sleeve. In AC circuits the product shall not be used with single core cable in galvanised cable ladders and profile rails because of the inductive heating.

CE 18 22 U

St Steel

FT Hot-dip galvanised

Master data

Item number	1186530
Type	BS-U2-M-34 FT
Description 1	Clamp clip 2056
Description 2	double
Manufacturer	OBO
Dimension	28-34mm
Material	Steel
Surface	Hot-dip galvanised
Surface standard	DIN EN ISO 1461
Smallest sales unit	50
Unit of quantity	Piece
Weight	9.058 kg
Weight unit	kg/100 pc.
CO2 Footprint (GWP) Cradle-to-Gate	0,2227 kg CO2e / 1 Piece

Technical data sheet

Clamp clip 2056 U-foot, 2-fold, metal pressure sleeve, FT

Item number: 1186530

Dimensions

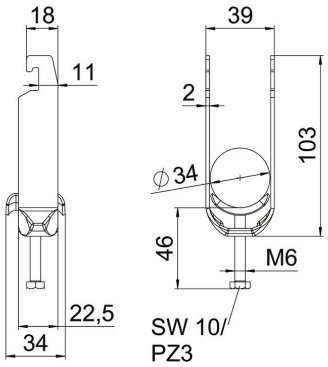

Length	22.5 mm
Width	39 mm
Height	103 mm
Plate thickness	2 mm
Dimension A	22.5 mm
Dimension B	39 mm
Dimension C	34 mm
Dimension G (mm)	M6
Dimension H	103 mm
Dimension L	46 mm
Dimension t	2 mm

Technical data

Number of cables/pipes	2
For pipe diameter, max.	34 mm
For pipe diameter, min.	28 mm
for rail with slot width (with interval), max.	22 mm
for rail with slot width (with interval), min.	18 mm
Thread	M6
Halogen-free	yes
Length of external dimensions	34 mm
Max. Tightening torque	3 Nm
With plastic trough	no
With metal trough	yes
Mounting type	Profile rail
ROHS-conformant	yes
Slot width	10 mm
Clamping range D, max.	34 mm
Clamping range D, min.	28 mm
Surface addition	hot galvanised
Material addition	Steel
With counter-trough	no
Material of trough	Steel