Technical data sheet

Clamp clip 2056 H-foot, 3-fold, plastic pressure sleeve, Al

Item number: 1186411

Clamp clip with hammerhead foot, plastic pressure sleeve made of polypropylene. For vertical and horizontal mounting of 3 single cables on a C-profile rail. For a slot width 16–17 mm. With 1-start screw thread on pressure sleeve, universal hexagonal screw head WAF10, with slot and cross recess. Suitable for assembly indoors and outdoors. Multiple cables should be separated by double sleeves. We recommend the use of a counter-sleeve.

HALOGEN FREE 16-17 H

Alu Aluminium

Master data

Item number	1186411
Type	BS-H3-K-16 ALU
Description 1	Clamp clip 2056
Description 2	triple
Manufacturer	OBO
Dimension	12-16mm
Material	Aluminium
Smallest sales unit	50
Unit of quantity	Piece
Weight	1.984 kg
Weight unit	kg/100 pc.
CO2 Footprint (GWP) Cradle-to-Gate	0,2759 kg CO2e / 1 Piece

Technical data sheet

Clamp clip 2056 H-foot, 3-fold, plastic pressure sleeve, Al

Item number: 1186411

Dimensions

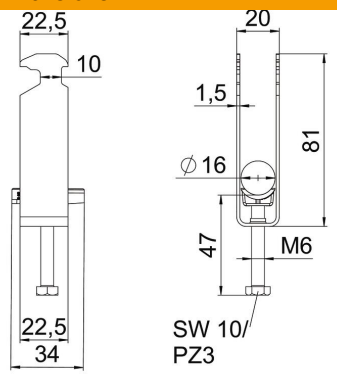

Length	22.5 mm
Width	20 mm
Height	81 mm
Plate thickness	1.5 mm
Dimension A	22.5 mm
Dimension B	20 mm
Dimension C	34 mm
Dimension G (mm)	M6
Dimension H	81 mm
Dimension L	47 mm
Dimension t	1.5 mm

Technical data

Number of cables/pipes	3
For pipe diameter, max.	16 mm
For pipe diameter, min.	12 mm
for rail with slot width (with interval), max.	17 mm
for rail with slot width (with interval), min.	16 mm
Thread	M6
Halogen-free	yes
Length of external dimensions	34 mm
Max. Tightening torque	3 Nm
With plastic trough	yes
With metal trough	no
Mounting type	Profile rail
ROHS-conformant	yes
Slot width	10 mm
Clamping range D, max.	16 mm
Clamping range D, min.	12 mm
Surface addition	Untreated
Material addition	Aluminium
With counter-trough	no
Material of trough	Plastic
Material quality of trough	Polypropylene