Technical data sheet

Clamp clip 2056 H-foot, 2-fold, metal pressure sleeve, A2

Item number: 1186143

Clamp clip with hammerhead foot, metal pressure sleeve with rounded edges to protect the cable. For vertical and horizontal mounting of 2 single cables on a C-profile rail. For a slot width 16–17 mm. With 1-start screw thread on pressure sleeve, universal hexagonal screw head WAF10, with slot and cross recess. Suitable for assembly indoors and outdoors. Multiple cables should be separated by double sleeves. We recommend the use of a counter-sleeve.

16-17 H

A2 Stainless steel

2B Bright, treated

Master data

Item number	1186143
Type	BS-H2-M-46 A2
Description 1	Clamp clip 2056
Description 2	double
Manufacturer	OBO
Dimension	40-46mm
Material	Stainless steel 1.4301
Surface Surface standard	Bright, treated
Smallest sales unit	25
Unit of quantity	Piece
Weight	15.281 kg
Weight unit	kg/100 pc.
CO2 Footprint (GWP) Cradle-to-Gate	1,0558 kg CO2e / 1 Piece

Technical data sheet

Clamp clip 2056 H-foot, 2-fold, metal pressure sleeve, A2

Item number: 1186143

Dimensions

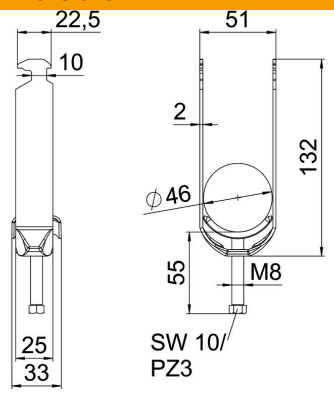

Length	25 mm
Width	51 mm
Height	132 mm
Plate thickness	2 mm
Dimension A	25 mm
Dimension B	51 mm
Dimension C	33 mm
Dimension G (mm)	M8
Dimension H	132 mm
Dimension L	55 mm
Dimension t	2 mm

Technical data

Number of cables/pipes	2
For pipe diameter, max.	46 mm
For pipe diameter, min.	40 mm
for rail with slot width (with interval), max.	17 mm
for rail with slot width (with interval), min.	16 mm
Thread	M8
Halogen-free	yes
Length of external dimensions	33 mm
Max. Tightening torque	5 Nm
With plastic trough	no
With metal trough	yes
Mounting type	Profile rail
ROHS-conformant	yes
Slot width	10 mm
Clamping range D, max.	46 mm
Clamping range D, min.	40 mm
Surface addition	Untreated
Material addition	Rustproof steel
With counter-trough	no
Material of trough	Rustproof steel
Material quality of trough	Stainless steel 304 (1.4301)