Technical data sheet

Clamp clip 2056 H-foot, 2-fold, metal pressure sleeve, A2

Item number: 1186103

Clamp clip with hammerhead foot, metal pressure sleeve with rounded edges to protect the cable. For vertical and horizontal mounting of 2 single cables on a C-profile rail. For a slot width 16–17 mm. With 1-start screw thread on pressure sleeve, universal hexagonal screw head WAF10, with slot and cross recess. Suitable for assembly indoors and outdoors. Multiple cables should be separated by double sleeves. We recommend the use of a counter-sleeve.

CE 16-17 H E30 E60 E90

A2 Stainless steel

2B Bright, treated

Master data

Item number	1186103
Type	BS-H2-M-12 A2
Description 1	Clamp clip 2056
Description 2	double
Manufacturer	OBO
Dimension	08-12mm
Material	Stainless steel 1.4301
Surface Surface standard	Bright, treated
Smallest sales unit	50
Unit of quantity	Piece
Weight	4.165 kg
Weight unit	kg/100 pc.
CO2 Footprint (GWP) Cradle-to-Gate	0,2958 kg CO2e / 1 Piece

Technical data sheet

Clamp clip 2056 H-foot, 2-fold, metal pressure sleeve, A2

Item number: 1186103

Dimensions

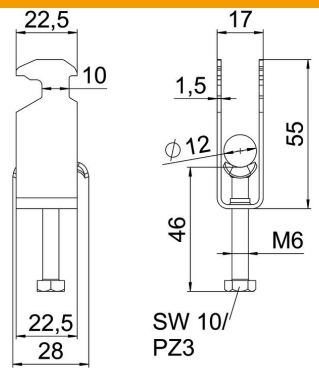

Length	22.5 mm
Width	17 mm
Height	55 mm
Plate thickness	1.5 mm
Dimension A	22.5 mm
Dimension B	17 mm
Dimension C	28 mm
Dimension G (mm)	M6
Dimension H	55 mm
Dimension L	46 mm
Dimension t	1.5 mm

Technical data

Number of cables/pipes	2
For pipe diameter, max.	12 mm
For pipe diameter, min.	8 mm
for rail with slot width (with interval), max.	17 mm
for rail with slot width (with interval), min.	16 mm
Thread	M6
Halogen-free	yes
Length of external dimensions	28 mm
Max. Tightening torque	3 Nm
With plastic trough	no
With metal trough	yes
Mounting type	Profile rail
ROHS-conformant	yes
Slot width	10 mm
Clamping range D, max.	12 mm
Clamping range D, min.	8 mm
Surface addition	Untreated
Material addition	Rustproof steel
With counter-trough	no
Material of trough	Rustproof steel
Material quality of trough	Stainless steel 304 (1.4301)