Technical data sheet

Clamp clip, hammer-head base, 3x single-wire connection

Item number: 1174614

Clip element, bolt and lock plate made of hot-dip galvanised steel, pressure and counter-trough made of polypropylene, halogen-free, light grey RAL 7035.

Delivered complete with lock plate and counter-troughs.
The clamp clips 2056/E are used for systematic routing of single-wire cables in rotary current networks. As, with this routing type, the magnetic fields counteract each other, no heating is to be feared and steel clips can be used.
2056/E is suitable for all profile rails of 16–17 mm slot width.

HALOGEN FREE · CE · 16-17 · H

St Steel

FT Hot-dip galvanised

Master data

Item number	1174614
Type	2056 E 37 FT
Description 1	Clamp clip
Description 2	for 3 single-wire cables
Manufacturer	OBO
Dimension	34-37mm
Material	Steel
Surface	Hot-dip galvanised
Surface standard	DIN EN ISO 1461
Smallest sales unit	25
Unit of quantity	Piece
Weight	24.6 kg
Weight unit	kg/100 pc.
CO2 Footprint (GWP) Cradle-to-Gate	0,5952 kg CO2e / 1 Piece

Technical data sheet

Clamp clip, hammer-head base, 3x single-wire connection

Item number: 1174614

Dimensions

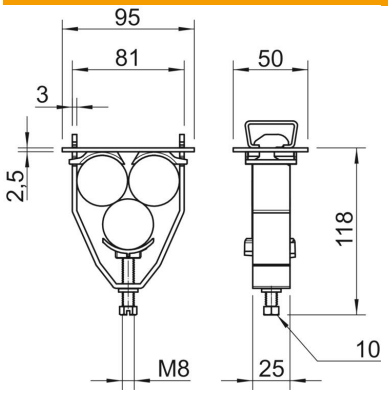

Dimension A	95 mm
Dimension B	81 mm
Dimension H	118 mm

Technical data

Number of cables/pipes	3
for rail with slot width (with interval), max.	17 mm
for rail with slot width (with interval), min.	16 mm
Halogen-free	yes
Cable diameter, max.	37 mm
Cable diameter, min.	34 mm
Max. Tightening torque	5 Nm
With plastic trough	yes
With metal trough	no
Mounting type	Profile rail
ROHS-conformant	yes
Impact-resistant	no
Clamping range D, max.	37 mm
Clamping range D, min.	34 mm
Surface addition	hot galvanised
Material addition	Steel
With counter-trough	yes
Material of trough	Plastic
Material quality of trough	Polypropylene
Material of counter-trough	Plastic