Technical data sheet

Clamp clip, 2056 RS foot, single, metal pressure sleeve, FT

Item number: 1158345

Clamp clip with RS foot, metal pressure sleeve with rounded edges to protect the cable. For vertical and horizontal mounting of 1 single cable on round profiles or pipes. With 1-start screw thread on pressure sleeve, universal hexagonal screw head WAF10, with slot and cross recess. Suitable for all round profile irons or pipes with diameters up to 22 mm. Suitable for mounting indoors and outdoors. We recommend the use of a counter-trough. In AC circuits the product shall not be used with single core cable in galvanised cable ladders and profile rails because of the inductive heating.

St Steel

FT Hot-dip galvanised

Master data

Item number	1158345
Type	BS-RS1-M-16 FT
Description 1	Clamp clip 2056
Manufacturer	OBO
Dimension	12-16
Material	Steel
Surface	Hot-dip galvanised
Surface standard	DIN EN ISO 1461
Smallest sales unit	100
Unit of quantity	Piece
Weight	4.319 kg
Weight unit	kg/100 pc.
CO2 Footprint (GWP) Cradle-to-Gate	0,1878 kg CO2e / 1 Piece

Technical data sheet

Clamp clip, 2056 RS foot, single, metal pressure sleeve, FT

Item number: 1158345

Dimensions

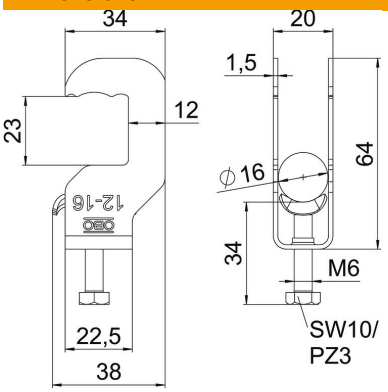

Length	33.5 mm
Width	20 mm
Height	64 mm
Plate thickness	1.5 mm
Dimension A	34 mm
Dimension B	20 mm
Dimension C	38 mm
Dimension E	12 mm
Dimension G (mm)	M6
Dimension H	64 mm
Dimension L	34 mm
Dimension t	1.5 mm

Technical data

Number of cables/pipes	1
For pipe diameter, max.	16 mm
For pipe diameter, min.	12 mm
Thread	M6
Halogen-free	yes
Length of external dimensions	38 mm
Max. Tightening torque	3 Nm
With plastic trough	no
With metal trough	yes
Mounting type	Round profile
ROHS-conformant	yes
Slot width	10 mm
Clamping range D, max.	16 mm
Clamping range D, min.	12 mm
Surface addition	hot galvanised
Material addition	Steel
With counter-trough	no
Material of trough	Steel