Technical data sheet

MS4141 mounting rail, slot width 22 mm, FT, side perforation

Item number: 1123001

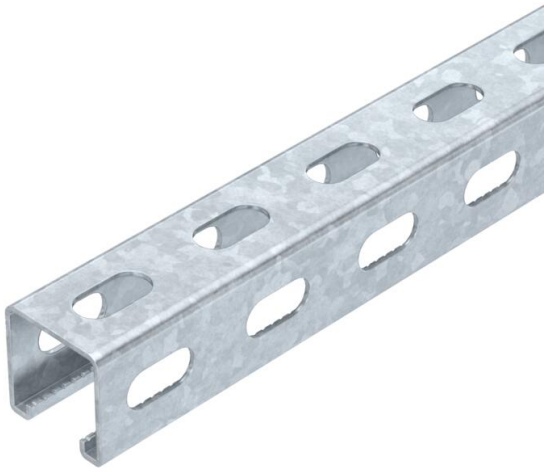

Heavy-duty C profile rail for individual installation of support constructions, e.g. for cable trays or as a panel for switchgear cabinets. Can also be used for cable routing, in conjunction with clamp clips with a U foot.

CE U 22 E30 E90

St Steel

FT Hot-dip galvanised

Master data

Item number	1123001
Type	MSL4141PP1000FT
Description 1	Profile rail
Description 2	perforated, slot 22mm
Manufacturer	OBO
Dimension	1000x41x41
Material	Steel
Surface	Hot-dip galvanised
Surface standard	DIN EN ISO 1461
Smallest sales unit	1
Unit of quantity	Metre
Weight	191.5 kg
Weight unit	kg/100 m
CO2 Footprint (GWP) Cradle-to-Gate	4,355 kg CO2e / 1 Meter

Technical data sheet

MS4141 mounting rail, slot width 22 mm, FT, side perforation

Item number: 1123001

Dimensions

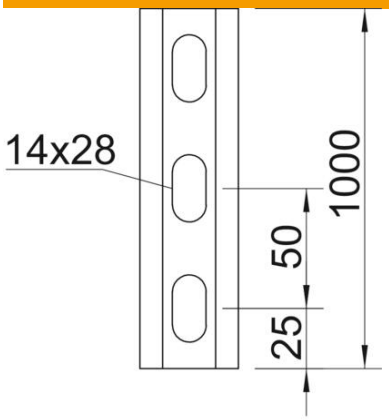

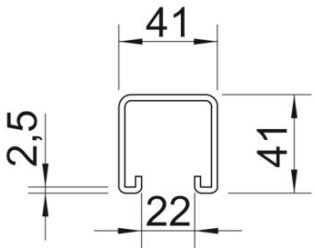

Length	1,000 mm
Width	41 mm
Height	41 mm
Dimension L	1,000 mm

Technical data

Breakable	no
Type of perforation	3 sides perforated
Version for	Single profile
Drill hole spacing, centre	50 mm
Maintain electrical functions	yes
Hole size	14x28
Material thickness	2 mm
With perforation	yes
With toothing	yes
Profile shape	C profile
ROHS-conformant	yes
Slot width	22 mm
Static value A	2.01 cm²
Static value Iy	5.13 cm⁴
Static value Iz	5.88 cm⁴
Static value Wy	2.49 cm³
Static value Wz	2.88 cm³