Technical data sheet

MS4141 mounting rail, slot 22 mm, A2, perforated

Item number: 1122982

Heavy-duty C profile rail for individual installation of support constructions, e.g. for cable trays or as a panel for switchgear cabinets. Can also be used for cable routing, in conjunction with clamp clips with a U foot.

U 22

A2 Stainless steel

2B Bright, treated

Master data

Item number	1122982
Type	MSL4141P6000A2
Description 1	Profile rail
Description 2	perforated, slot 22mm
Manufacturer	OBO
Dimension	6000x41x41
Material	Stainless steel 1.4301
Surface Surface standard	Bright, treated
Smallest sales unit	6
Unit of quantity	Metre
Weight	201.1 kg
Weight unit	kg/100 m
CO2 Footprint (GWP) Cradle-to-Gate	10,2122 kg CO2e / 1 Meter

Technical data sheet

MS4141 mounting rail, slot 22 mm, A2, perforated

Item number: 1122982

Dimensions

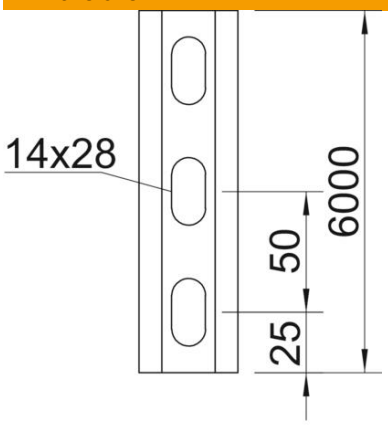

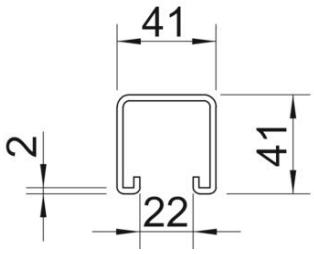

Length	6,000 mm
Width	41 mm
Height	41 mm
Dimension L	6,000 mm

Technical data

Breakable	no
Type of perforation	Perforated back
Version for	Single profile
Drill hole spacing, centre	50 mm
Maintain electrical functions	no
Hole size	14x28
Material thickness	2 mm
With perforation	yes
With toothing	yes
Profile shape	C profile
ROHS-conformant	yes
Slot width	22 mm
Static value A	2.45 cm^2
Static value Iy	5.18 cm^4
Static value Iz	7.56 cm^4
Static value Wy	2.51 cm^3
Static value Wz	2.69 cm^3