Technical data sheet

MS4142 mounting rail, slot 22 mm, double, FS, perforated

Item number: 1122948

Heavy-duty profile/mounting rail with continuous perforation in base, slot width 22 mm. Double version, i.e. two profile rails are interconnected on the base (clinched).

22 U

St Steel

FS Strip galvanised

Master data

Item number	1122948
Type	MS4142P6000FS
Description 1	Profile rail
Description 2	perforated, slot 22mm
Manufacturer	OBO
Dimension	6000x41x42
Material	Steel
Surface	Strip galvanised
Surface standard	DIN EN 10346
Smallest sales unit	6
Unit of quantity	Metre
Weight	303 kg
Weight unit	kg/100 m
CO2 Footprint (GWP) Cradle-to-Gate	6,9141 kg CO2e / 1 Meter

Technical data sheet

MS4142 mounting rail, slot 22 mm, double, FS, perforated

Item number: 1122948

Dimensions

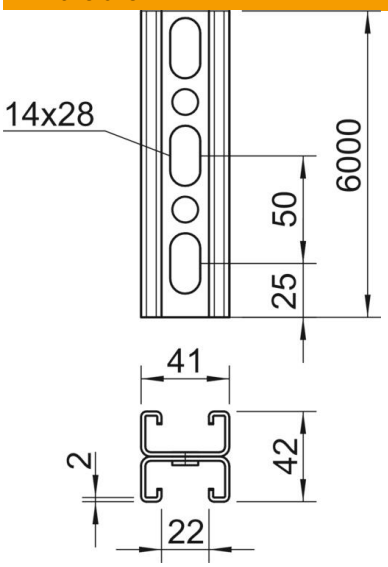

Length	6,000 mm
Width	41 mm
Height	42 mm
Dimension L	6,000 mm

Technical data

Breakable	no
Type of perforation	Perforated bar
Version for	Double profile
Maintain electrical functions	no
Hole size	14x28
Material thickness	2 mm
With toothing	yes
Profile shape	C profile
ROHS-conformant	yes
Slot width	22 mm
Static value A	3.3 cm^2
Static value Iy	5.38 cm^4
Static value Iz	9.02 cm^4
Static value Wy	1.28 cm^3
Static value Wz	0.25 cm^3