Technical data sheet

MS4121 mounting rail, slot 22 mm, FT, perforated

Item number: 1122939

Heavy-duty C profile rail for individual installation of support constructions, e.g. for cable trays or as a panel for switchgear cabinets. Can also be used for cable routing, in conjunction with clamp clips with a U foot.

22 U E30 E90

St Steel

FT Hot-dip galvanised

Master data

Item number	1122939
Type	MS4121P0800FT
Description 1	Profile rail
Description 2	perforated, slot 22mm
Manufacturer	OBO
Dimension	800x41x21
Material	Steel
Surface	Hot-dip galvanised
Surface standard	DIN EN ISO 1461
Smallest sales unit	1
Unit of quantity	Piece
Weight	140 kg
Weight unit	kg/100 pc.
CO2 Footprint (GWP) Cradle-to-Gate	2,535 kg CO2e / 1 Piece

Technical data sheet

MS4121 mounting rail, slot 22 mm, FT, perforated

Item number: 1122939

Dimensions

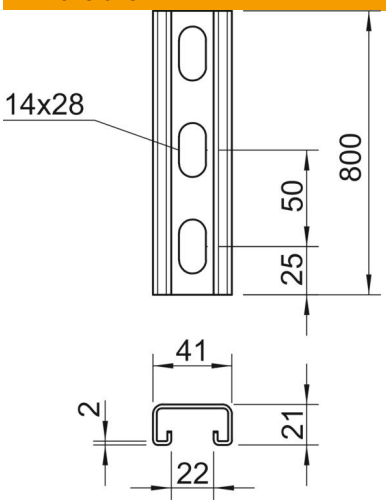

Length	800 mm
Width	41 mm
Height	21 mm
Dimension L	800 mm

Technical data

Breakable	no
Type of perforation	Perforated back
Version for	Single profile
Drill hole spacing, centre	50 mm
Maintain electrical functions	yes
Hole size	14x28
Material thickness	2 mm
With perforation	yes
With toothing	yes
Profile shape	C profile
ROHS-conformant	yes
Slot width	22 mm
Static value A	1.65 cm^2
Static value Iy	0.95 cm^4
Static value Iz	4.51 cm^4
Static value Wy	0.89 cm^3
Static value Wz	2.2 cm^3