Technical data sheet

MS4121 mounting rail, slot 22 mm, A4, perforated

Item number: 1122932

Heavy-duty C profile rail for individual installation of support constructions, e.g. for cable trays or as a panel for switchgear cabinets. Can also be used for cable routing, in conjunction with clamp clips with a U foot.

22 U

A4 Stainless steel

2B Bright, treated

Master data

Item number	1122932
Type	MS4121P6000A4
Description 1	Profile rail
Description 2	perforated, slot 22mm
Manufacturer	OBO
Dimension	6000x41x21
Material	Stainless steel 1.4571
Surface Surface standard	Bright, treated
Smallest sales unit	6
Unit of quantity	Metre
Weight	172.67 kg
Weight unit	kg/100 m
CO2 Footprint (GWP) Cradle-to-Gate	7,2882 kg CO2e / 1 Meter

Technical data sheet

MS4121 mounting rail, slot 22 mm, A4, perforated

Item number: 1122932

Dimensions

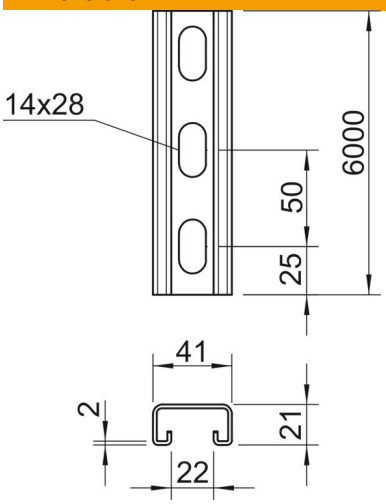

Length	6,000 mm
Width	41 mm
Height	21 mm
Dimension L	6,000 mm

Technical data

Breakable	no
Type of perforation	Perforated back
Version for	Single profile
Drill hole spacing, centre	50 mm
Maintain electrical functions	yes
Hole size	14x28
Material thickness	2 mm
With perforation	yes
With toothing	yes
Profile shape	C profile
ROHS-conformant	yes
Slot width	22 mm
Static value A	1.65 cm^2
Static value Iy	0.95 cm^4
Static value Iz	4.51 cm^4
Static value Wy	0.89 cm^3
Static value Wz	2.2 cm^3