Technical data sheet

MS4141 mounting rail, slot 22 mm, FS, side perforation

Item number: 1122914

Heavy-duty C profile rail for individual installation of support constructions, e.g. for cable trays or as a panel for switchgear cabinets. Can also be used for cable routing, in conjunction with clamp clips with a U foot.

U 22 E30 E90

St Steel

FS Strip galvanised

Master data

Item number	1122914
Type	MS4141PP3000FS
Description 1	Profile rail
Description 2	perforated, slot 22mm
Manufacturer	OBO
Dimension	3000x41x41
Material	Steel
Surface	Strip galvanised
Surface standard	DIN EN 10346
Smallest sales unit	3
Unit of quantity	Metre
Weight	218 kg
Weight unit	kg/100 m
CO2 Footprint (GWP) Cradle-to-Gate	5,886 kg CO2e / 1 Meter

Technical data sheet

MS4141 mounting rail, slot 22 mm, FS, side perforation

Item number: 1122914

Dimensions

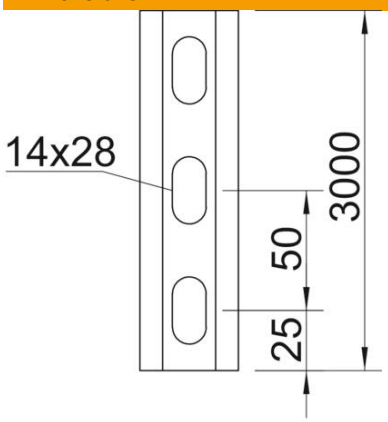

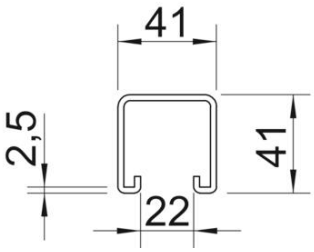

Length	3,000 mm
Width	41 mm
Height	41 mm
Dimension L	3,000 mm

Technical data

Breakable	no
Type of perforation	3 sides perforated
Version for	Single profile
Drill hole spacing, centre	50 mm
Maintain electrical functions	yes
Hole size	14x28
Material thickness	2.5 mm
With perforation	yes
With toothing	yes
Profile shape	C profile
ROHS-conformant	yes
Slot width	22 mm
Static value A	2.42 cm^2
Static value Iy	6 cm^4
Static value Iz	6.97 cm^4
Static value Wy	2.91 cm^3
Static value Wz	4.4 cm^3