# Technical data sheet

## Profile rail MS 22 L FT

## Item number: 1122742

Heavy-duty C profile rail for individual installation of support constructions, e.g. for cable trays or as a panel for switchgear cabinets. Can also be used for cable routing, in conjunction with clamp clips with a U foot.

18 U

St Steel

FT Hot-dip galvanised

### Master data

| | |
|---|---|
| Item number | 1122742 |
| Type | MS 22 L 3M FT |
| Description 1 | Profile rail |
| Description 2 | perforated, slot 18mm |
| Manufacturer | OBO |
| Dimension | 3000x40x22,5 |
| Material | Steel |
| Surface | Hot-dip galvanised |
| Surface standard | DIN EN ISO 1461 |
| Smallest sales unit | 3 |
| Unit of quantity | Metre |
| Weight | 150.66 kg |
| Weight unit | kg/100 m |
| CO2 Footprint (GWP) Cradle-to-Gate | 3,3147 kg CO2e / 1 Meter |

# Technical data sheet

## Profile rail MS 22 L FT

## Item number: 1122742

### Dimensions

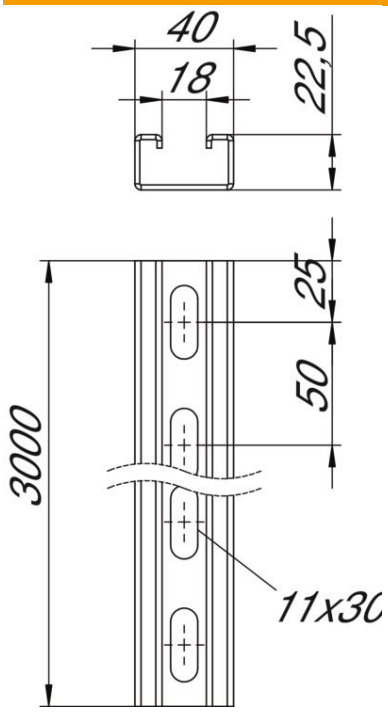


| | |
|---|---|
| Length | 3,000 mm |
| Width | 40 mm |
| Height | 22.5 mm |
| Dimension L | 3,000 mm |

### Technical data

| | |
|---|---|
| Breakable | no |
| Type of perforation | Perforated back |
| Version for | Single profile |
| Drill hole spacing, centre | 50 mm |
| Maintain electrical functions | no |
| Hole size | 11x30 |
| Material thickness | 2 mm |
| With perforation | yes |
| With toothing | no |
| Profile shape | C profile |
| ROHS-conformant | yes |
| Slot width | 18 mm |
| Static value A | 1.74 $cm^2$ |
| Static value Iy | 1.19 $cm^4$ |
| Static value Iz | 4.46 $cm^4$ |
| Static value Wy | 1.05 $cm^3$ |
| Static value Wz | 2.23 $cm^3$ |