Technical data sheet

Profile rail MS 22 L FT

Item number: 1122723

Heavy-duty C profile rail for individual installation of support constructions, e.g. for cable trays or as a panel for switchgear cabinets. Can also be used for cable routing, in conjunction with clamp clips with a U foot.

18 U

St Steel

FT Hot-dip galvanised

Master data

Item number	1122723
Type	MS 22 L 700 FT
Description 1	Profile rail
Description 2	perforated, slot 18mm
Manufacturer	OBO
Dimension	700x40x22,5
Material	Steel
Surface	Hot-dip galvanised
Surface standard	DIN EN ISO 1461
Smallest sales unit	1
Unit of quantity	Piece
Weight	105 kg
Weight unit	kg/100 pc.
CO2 Footprint (GWP) Cradle-to-Gate	2,314 kg CO2e / 1 Piece

Technical data sheet

Profile rail MS 22 L FT

Item number: 1122723

Dimensions

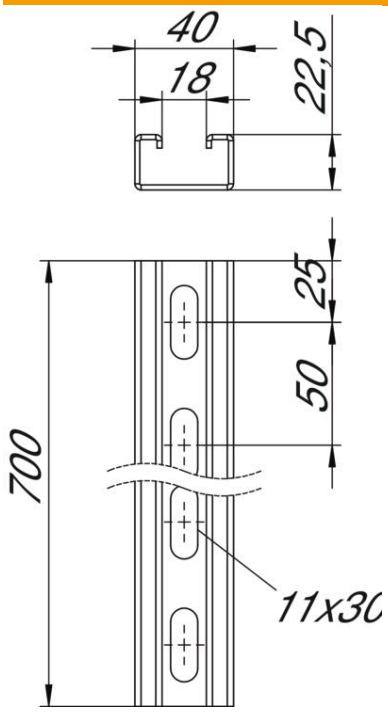

Length	700 mm
Width	40 mm
Height	22.5 mm
Dimension L	700 mm

Technical data

Breakable	no
Type of perforation	Perforated back
Version for	Single profile
Drill hole spacing, centre	50 mm
Maintain electrical functions	no
Hole size	11x30
Material thickness	2 mm
With perforation	yes
With toothing	no
Profile shape	C profile
ROHS-conformant	yes
Slot width	18 mm
Static value A	1.74 cm^2
Static value Iy	1.19 cm^4
Static value Iz	4.46 cm^4
Static value Wy	1.05 cm^3
Static value Wz	2.23 cm^3